REVISION				
REV	DESCRIPTION	DRAWN	APPR	DATE
IR	Initial Registration	I.C.KIM		2014.12.16.

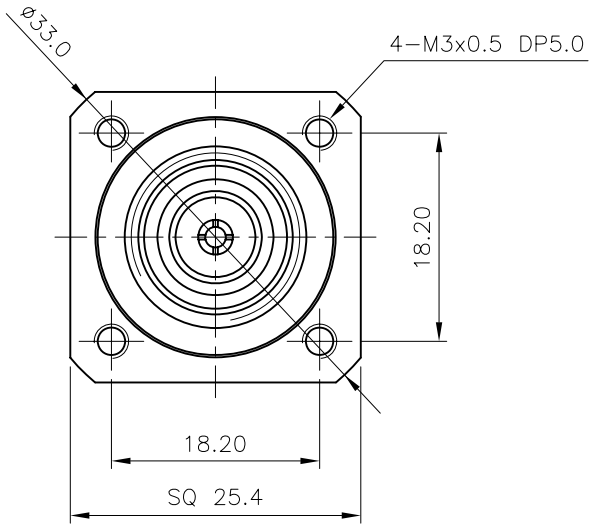

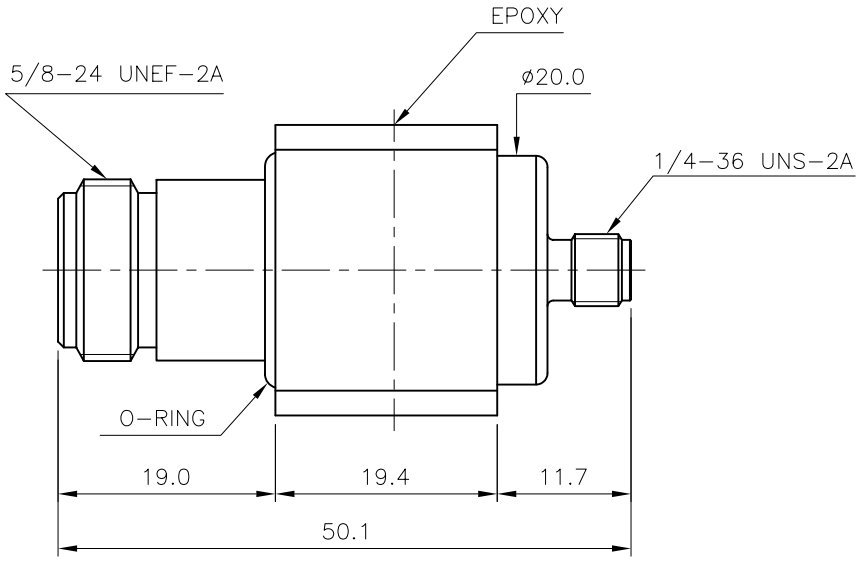

ELECTRICAL SPEC

1. Impedance : 50ohm (Nominal)
2. Frequency range : DC 2.5GHz
3. VSWR (max) : 1.2
4. SURGE Current : 1.2x50㎲ 6kV/3kA

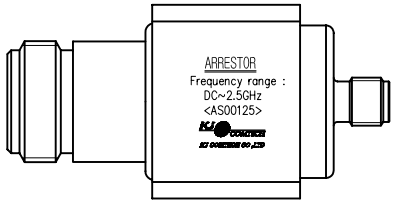

LABEL 부착

NO.	DESCRIPTION	Q'TY	MATERIAL	PLATING	CODE

TOLERANCE	Decimal ±0.1	DATE	2014. 12. 16.
	Angle ±1°	APPROVED BY	
		CHECKED BY	
MATERIAL	———	DRAWN BY	I.C.KIM
FINISH	———	SCALE 1.5/1	UNIT mm

KJ COMTECH
KJ COMTECH CO.,LTD.
RF & MICROWAVE TECHNOLOGY
Tel : 82-32-347-8015
Fax : 82-32-347-8017

TITLE N50 (J) SMA50 (J) ARRESTER(Gas Type)

A4

DWG NO. AS00125-7/1

REVISION I R

SHEET 1 of 1