REVISION				
REV	DESCRIPTION	DRAWN	APPR	DATE
IR	Initial Registration	I.C.KIM	I.C.KIM	2013.05.13.

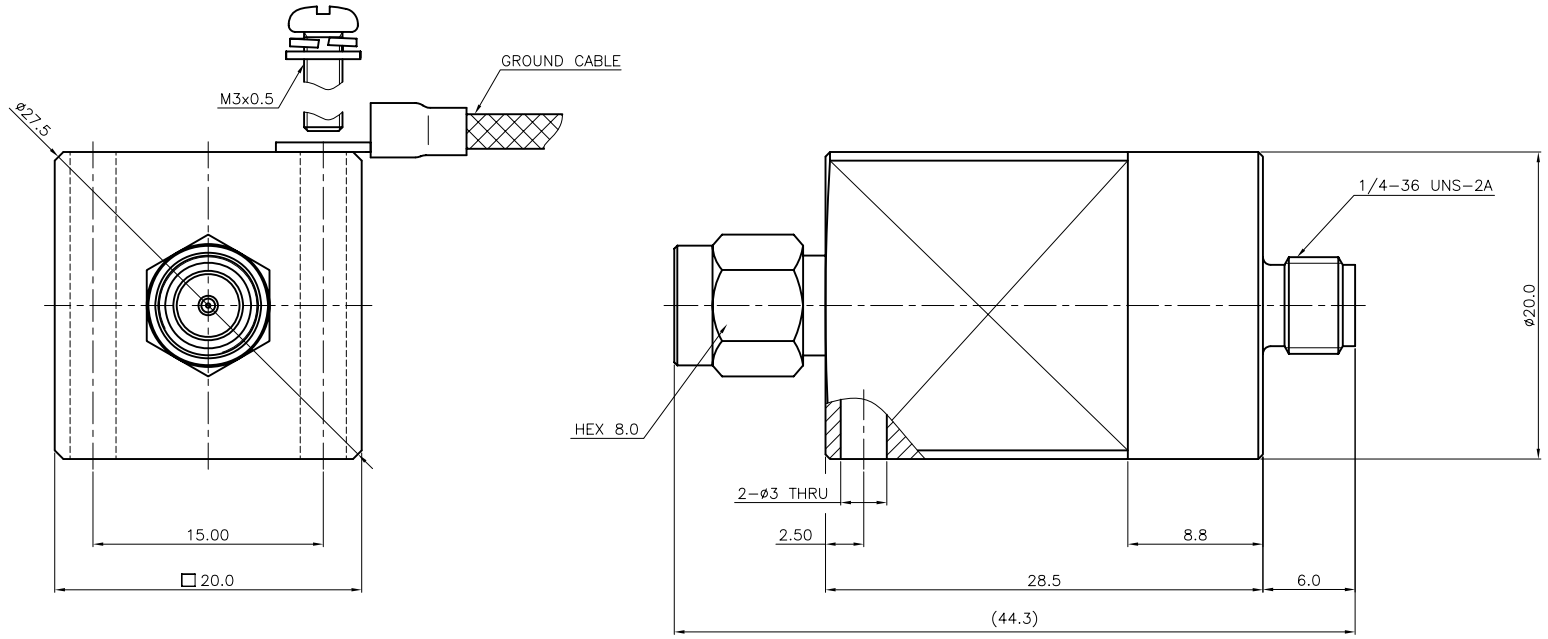

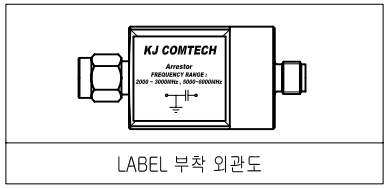

LABEL 부착 외관도

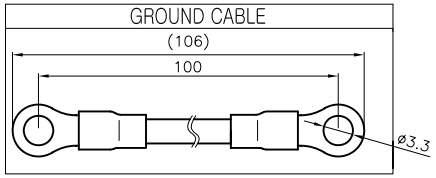

* ELECTRICAL SPECIFICATIONS
Frequency Range : 2000~3000 , 5000~6000MHz
Insertion Loss (Max.) : 0.5 dB
V.S.W.R (Max.) : 1.3 : 1
Impedance : 50Ω
Surge Protection Capability
: 6kV(1.2/50㎲) / 3kA (8/20㎲)

Notes

1. RoHS & Pb-FREE
2. CONNECTOR MATERIAL & FINISHES
   2-1. SMA PJ--▶▷BODY : BRASS / Nickel Plating
   CONTACT (JACK) : BeCu / Gold Plating
   (PLUG) : BRASS / Gold Plating
   CAP : Nickel Plating

NO.	DESCRIPTION	Q'TY	MATERIAL	PLATING	CODE

TOLERANCE	Decimal ±0.1	DATE	2013. 05. 13.
	Angle ±1°	APPROVED BY	I.C.KIM
MATERIAL		CHECKED BY	E.H.KIM
		DRAWN BY	I.C.KIM
FINISH		SCALE 3/1	UNIT mm

KJ COMTECH
KJ COMTECH CO.,LTD.
RF & MICROWAVE TECHNOLOGY
Tel : 82-32-347-8015
Fax : 82-32-347-8017

TITLE: SMAP SMAJ (1/4λ) ARRESTOR 2000~3000 , 5000~6000 MHz

A3 | DWG NO. AS00120-7/1 | REVISION I R | SHEET 1 of 1