| REVISION | | |
|---|---|---|
| REV. | DESCRIPTION | DATE |
| IR | Initial Registration | 2003.07.14. |
| A | 생산성 향상 (PIN 변경, GASKET 변경) | 2003.11.21. |
| B | [설변No:연구2006-059] 조립후 PIN 유동 발생 개선 및 공차 오류 | 2006.03.10. |
| OR | 업체 제출 제품에 맞게 외관도 수정 | 2009.11.18. |
| C | [설변처리No:200912-0012] SPRING WASHER 추가 및 BOLT 길이 변경 | 2009.12.16. |

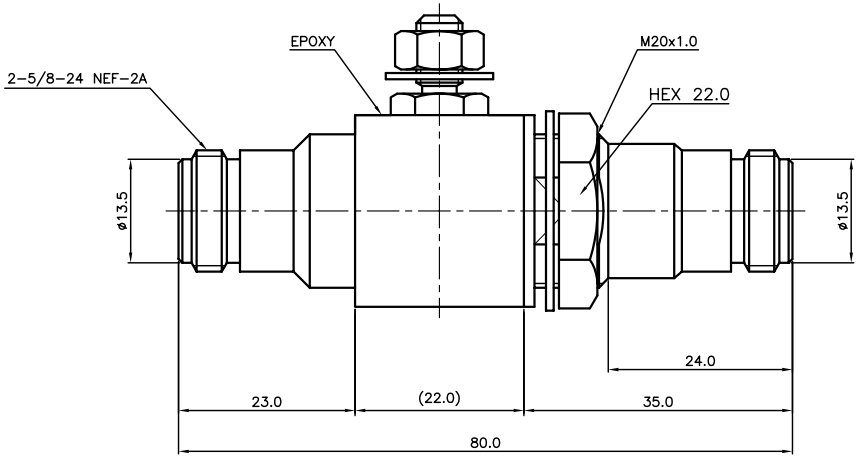


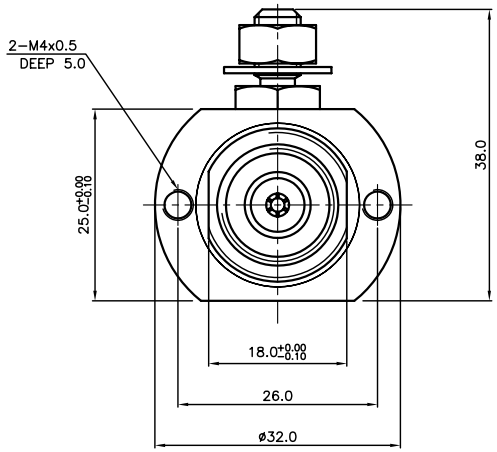


| | NO. | DESCRIPTION | Q'TY | MATERIAL | PLATING | CODE |
|---|---|---|---|---|---|---|
| | 15 | LABEL | 1 | 은무 데드론 | | DLA00281-8/1 |
| | 14 | GAS TUBE (2P-23) | 1 | | | DGT00001-N/1 (XA703) |
| C | 13 | SPRING WASHER | 1 | BeCu | Silver Plate (7㎛) | DWA00086-5/2 |
| | 12 | WASHER | 1 | SUS | 부동태 처리 | DWA00085-5/1 (Q8030) |
| | 11 | WASHER | 1 | MBsBD | SUCO Plate | DWA00048-5/1 (Q8023) |
| | 10 | NUT | 1 | SUS | 부동태 처리 | DNT00004-5/1 (N8012) |
| | 9 | NUT | 1 | MBsBD | SUCO Plate | DNT00011-5/1 (N8009) |
| C | 8 | BOLT | 1 | MBsBD | SUCO Plate | DBT00994-5/1 ~~DBT00012-5/1 (L8029)~~ |
| | 7 | INSULATOR | 1 | TEFLON | | DIN00972-N/1 (H8195) |
| B | 6 | INSULATOR | 1 | TEFLON | | DIN00971-N/1 (H8258) ~~DIN00668-N/1 (H8149)~~ |
| A | 5 | GASKET | 1 | SILICONE RUB | | DGK00080-N/1 (G8035) |
| A | 4 | CONTACT | 2 | BeCu | Gold Plate | DCT01575-5/2 |
| | 3 | CONTACT | 1 | MBsBD | Gold Plate | DCT01026-5/1 (E8248) |
| | 2 | BODY (B) | 1 | MBsBD | SUCO Plate | DBD01376-5/1 (D8267B) |
| OR | 1 | BODY (A) | 1 | MBsBD | SUCO Plate | DBD02643-5/1 |

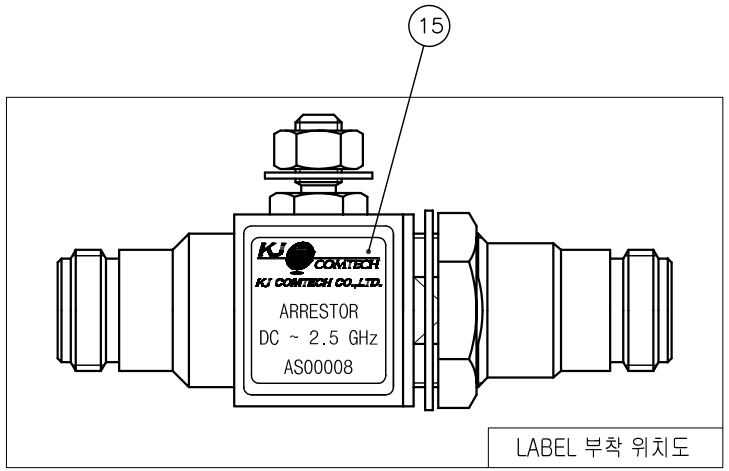


LABEL 부착 위치도

* ELECTRICAL SPECIFICATIONS
Impedance : 50Ω (Nominal)
Frequency Range : DC~2.5GHz
V.S.W.R (MAX) : 1.2 : 1
Insertion Loss : 0.2dB (MAX)
Type : Gas Capsule Type
DC Break down Voltage : 230V ±20%

| | | | |
|---|---|---|---|
| TOLERANCE | Decimal ±0.1 | DATE | 2009. 12. 16. |
| | Angle ±1° | APPROVED BY | J.H.YOUN |
| MATERIAL | ——— | CHECKED BY | K.I.CHO |
| | | DRAWN BY | I.C.KIM |
| FINISH | ——— | SCALE 3/1 | UNIT mm |

KJ COMTECH
KJ COMTECH CO.,LTD.
RF & MICROWAVE TECHNOLOGY
Tel : 82-32-347-8015
Fax : 82-32-347-8017

TITLE: ARRESTOR NJ-NJ/BH

A3 | DWG NO. AS00008-7/3 | REVISION C | SHEET 1 of 1