REVISION				
REV	DESCRIPTION	DRAWN	APPR	DATE
IR	Initial Registration	S.H.KIM		2022. 03. 24.

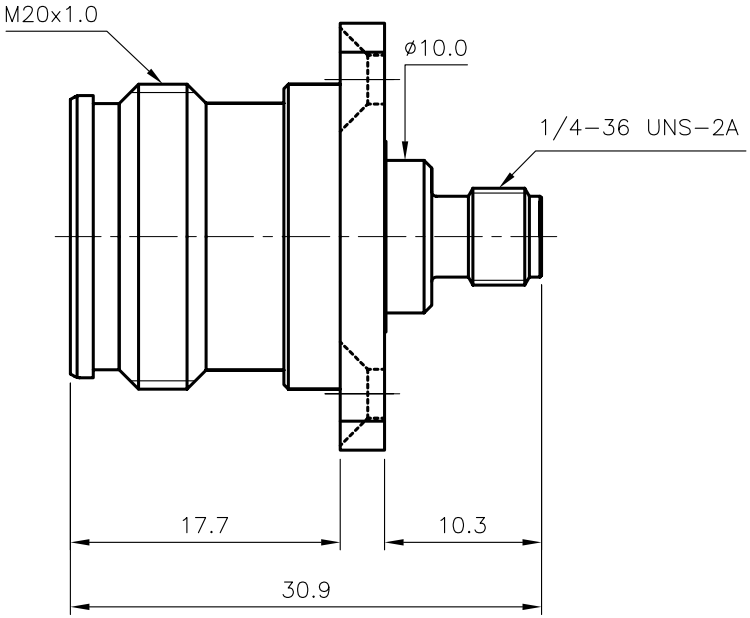

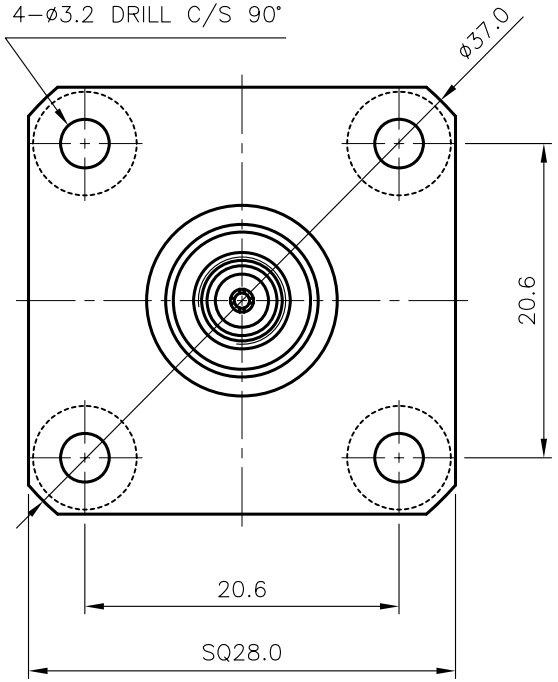

* ELECTRICAL SPECIFICATIONS
Frequency Range : DC~6000 MHz
Impedance : 50Ω
V.S.W.R (Max.) : 1.2 : 1
Insertion Loss (Min.) : -0.3dB

PIMD :
PIM SPEC. 3th -158dBc (43.0dBm 2Tone) Max.
-양품의 선정기준
~ -157.9dBc 불량
-158dBc ~ -170dBc 양품

PIMD 양호 -> AD00736-7/1
PIMD 미달 -> AD00736-7/2

■ 포장사양
- END CAP 체결 후 실리카겔 동봉하여 개별포장 할 것
- ▣P-V1-10-100-B

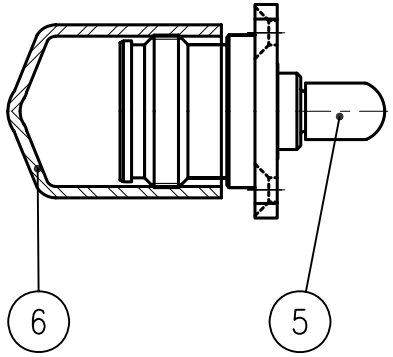

NO.	DESCRIPTION	Q'TY	MATERIAL	PLATING	CODE
6	DUST CAP (4.3/10)	1	PVC	RED	DGK00224-N/1
5	DUST CAP (3.5mm)	1	PVC	RED	DGK00069-N/1
4	JACK	1	MBsBD C3604BD-F	Silver Plate (3㎛)	DJA00228-5/6
3	INSULATOR	1	TEFLON		DIN03066-N/1
2	CONTACT	1	BeCu C17300	Silver Plate (3㎛)	DAC03391-5/1
1	BODY	1	MBsBD C3604BD-F	SUCO Plate (3㎛)	DAD00443-5/1

TOLERANCE	Decimal ±0.3	DATE	2022. 03. 24.
	Angle ±1°	APPROVED BY	
		CHECKED BY	
MATERIAL		DRAWN BY	S.H.KIM
FINISH		SCALE 2/1	UNIT mm

KJ COMTECH
KJ COMTECH CO.,LTD.
RF & MICROWAVE TECHNOLOGY
Tel : 82-32-347-8015
Fax : 82-32-347-8017

TITLE 4.3-10 DIN50 (J) SMA(3.5mm) (J) 4 HOLE ADAPTOR

A4 | DWG NO. AD00736-7/2 | REVISION I R | SHEET 1 of 1