REVISION				
REV	DESCRIPTION	DRAWN	APPR	DATE
IR	Initial Registration	S.Y.EUN	I.C.KIM	2020.04.14.

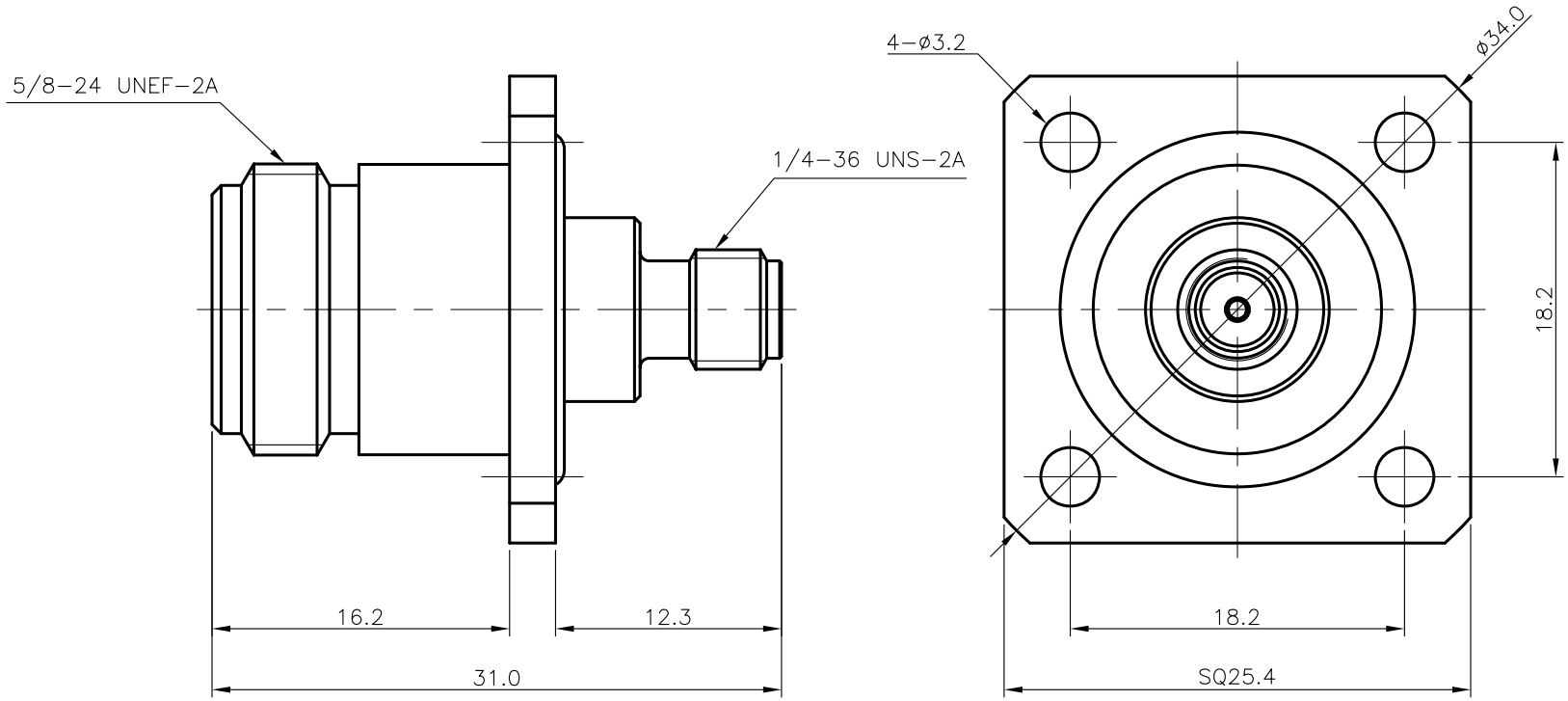

NO.	DESCRIPTION	Q'TY	MATERIAL	PLATING	CODE
4	GASKET	1	SILICONE RUB		DGK00045-N/1
3	INSULATOR	1	TEFLON		DAI00131-N/1
2	CONTACT	1	BeCu C17300	Gold Plate	DAC00236-5/1
1	BODY	1	MBsBD C3604BD-F	Nickel Plate	DAD00405-5/1

* ELECTRICAL DATA
1. IMPEDANCE : 50ohm
2. FREQUENCY RANGE : DC~6GHz
3. VSWR : 1.2 (Max)
4. INSERTION LOSS : 0.2dB (Max)

TOLERANCE	Decimal ±0.1	DATE	2020. 04. 14.
	Angle ±1°	APPROVED BY	I.C.KIM
		CHECKED BY	
MATERIAL		DRAWN BY	S.Y.EUN
FINISH		SCALE 2.5/1	UNIT mm

KJ COMTECH
KJ COMTECH CO.,LTD.
RF & MICROWAVE TECHNOLOGY
Tel : 82-32-347-8015
Fax : 82-32-347-8017

TITLE: N50 (J) SMA50 (J) 4H ADAPTOR

A4

DWG NO. AD00694-7/1

REVISION I R

SHEET 1 of 1