REVISION				
REV	DESCRIPTION	DRAWN	APPR	DATE
IR	Initial Registration	S.M.LEE	I.C.KIM	2015.05.21.

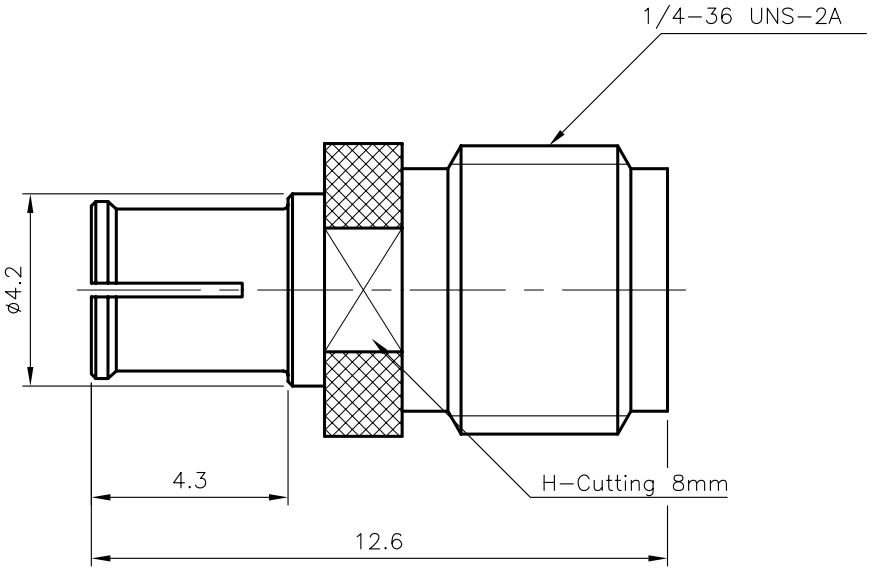

NO.	DESCRIPTION	Q'TY	MATERIAL	PLATING	CODE
4	JACK	1	BeCu C17300	Nickel Plate	DJA00220-5/1
3	INSULATOR	1	TEFLON		DAI02464-N/1
2	CONTACT	1	BeCu C17300	Gold Plate	DAC03240-5/1
1	BODY	1	MBsBD C3604BD-F	Nickel Plate	DAD00295-5/1

TOLERANCE	Decimal ±0.1	DATE	2015. 05. 21.
	Angle ±1°	APPROVED BY	I.C.KIM
		CHECKED BY	
MATERIAL	-	DRAWN BY	S.M.LEE
FINISH	-	SCALE 6/1	UNIT mm

KJ COMTECH
KJ COMTECH CO.,LTD.
RF & MICROWAVE TECHNOLOGY
Tel : 82-32-347-8015
Fax : 82-32-347-8017

TITLE
SMP MAX (J) SMA50 (J) ST

A4

DWG NO. AD00560-7/1

REVISION I R

SHEET 1 of 1