REVISION				
REV	DESCRIPTION	DRAWN	APPR	DATE
IR	Initial Registration	S.M.LEE	I.C.KIM	2015.04.10.

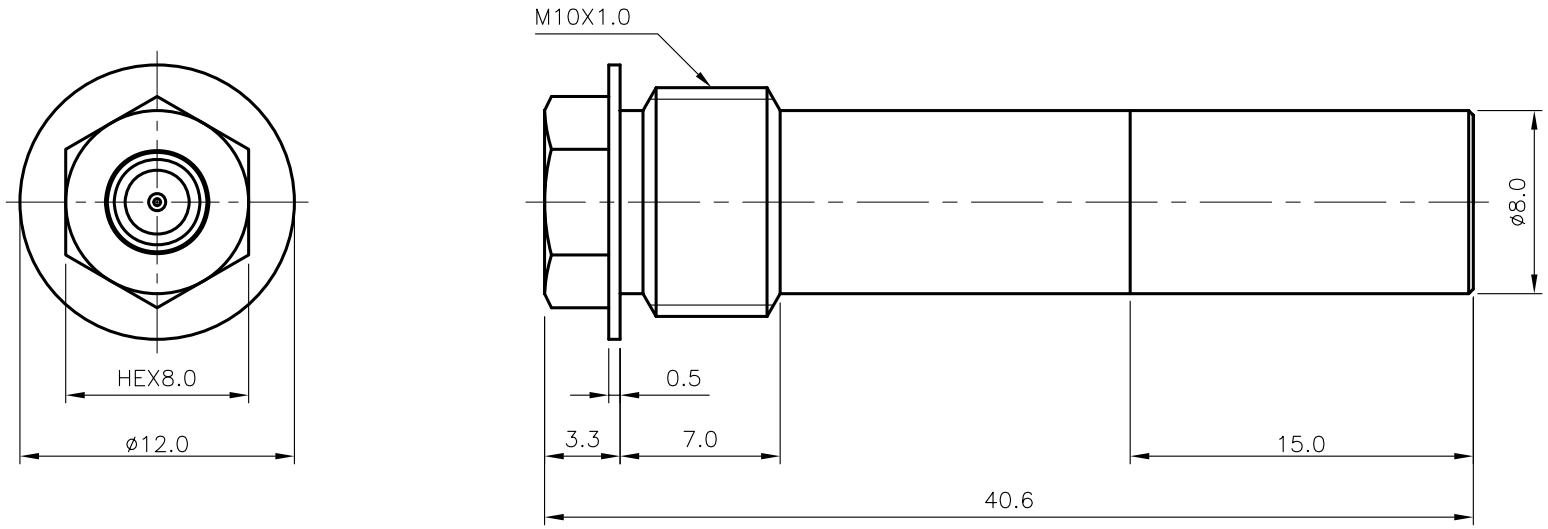

NO.	DESCRIPTION	Q'TY	MATERIAL	PLATING	CODE
4	INSULATOR	2	TEFLON		DIN02420-N/1
3	CONTACT	1	MBsBD C3604BD-F	Silver Plate	DAC03238-5/1
2	BODY	1	MBsBD C3604BD-F	SUCO Plate	DBD03921-5/1
1	BODY	1	MBsBD C3604BD-F	SUCO Plate	DBD03920-5/1

TOLERANCE	Decimal ±0.1	DATE	2015. 04. 10.
	Angle ±1°	APPROVED BY	I.C.KIM
		CHECKED BY	
MATERIAL	-	DRAWN BY	S.M.LEE
FINISH	-	SCALE 3/1	UNIT mm

KJ COMTECH
KJ COMTECH CO.,LTD.
RF & MICROWAVE TECHNOLOGY
Tel : 82-32-347-8015
Fax : 82-32-347-8017

TITLE SMP50 MAX (P) SMP50 MAX (P) ST Adaptor ■Snap On

A4

DWG NO. AD00556-7/1

REVISION I R

SHEET 1 of 1