REVISION				
REV	DESCRIPTION	DRAWN	APPR	DATE
IR	Initial Registration	I.C.KIM	I.C.KIM	2014.11.17.
1	[설변No.201501-0010]업체 요청으로 인한 HEX 치수 변경	H.J.LEE	I.C.KIM	2015.01.20.
2	[설변No.201506-0020] PIN 내경 치수 변경	H.J.LEE	I.C.KIM	2015.06.19.
3	[설변No.201507-0009] 유격으로 인하여 TEFLON 길이 수정	H.J.LEE	I.C.KIM	2015.07.09.

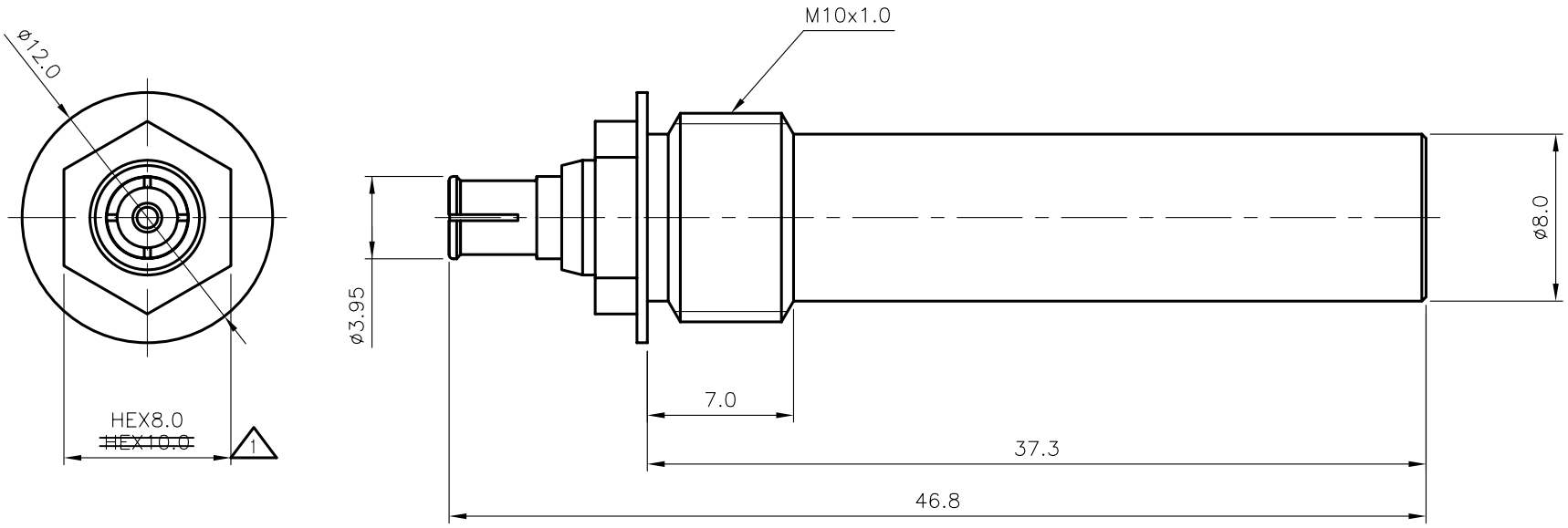

	NO.	DESCRIPTION	Q'TY	MATERIAL	PLATING	CODE
3	5	INSULATOR	1	TEFLON		DIN02420-N/1
	4	INSULATOR	1	TEFLON		DIN02491-N/1
2	3	CONTACT	1	BeCu	Silver Plate	DAC00278-5/2
1	2	BODY	1	MBsBD	SUCO Plate	DBD03673-5/3 ~~DBD03673-5/2~~
	1	BODY	1	BeCu	SUCO Plate	DBD03672-5/3

TOLERANCE	Decimal ±0.1	DATE	2015. 07. 09.
	Angle ±1°	APPROVED BY	I.C.KIM
		CHECKED BY	
MATERIAL	-	DRAWN BY	H.J.LEE
FINISH	-	SCALE 3/1	UNIT mm

KJ COMTECH
KJ COMTECH CO.,LTD.
RF & MICROWAVE TECHNOLOGY
Tel : 82-32-347-8015
Fax : 82-32-347-8017

TITLE
SMP MAX (J) SMP MAX (P) ST

A4

DWG NO. AD00529-7/2

REVISION 3

SHEET 1 of 1