REVISION				
REV	DESCRIPTION	DRAWN	APPR	DATE
IR	Initial Registration	M.H.SONG	I.C.KIM	2014.05.07.

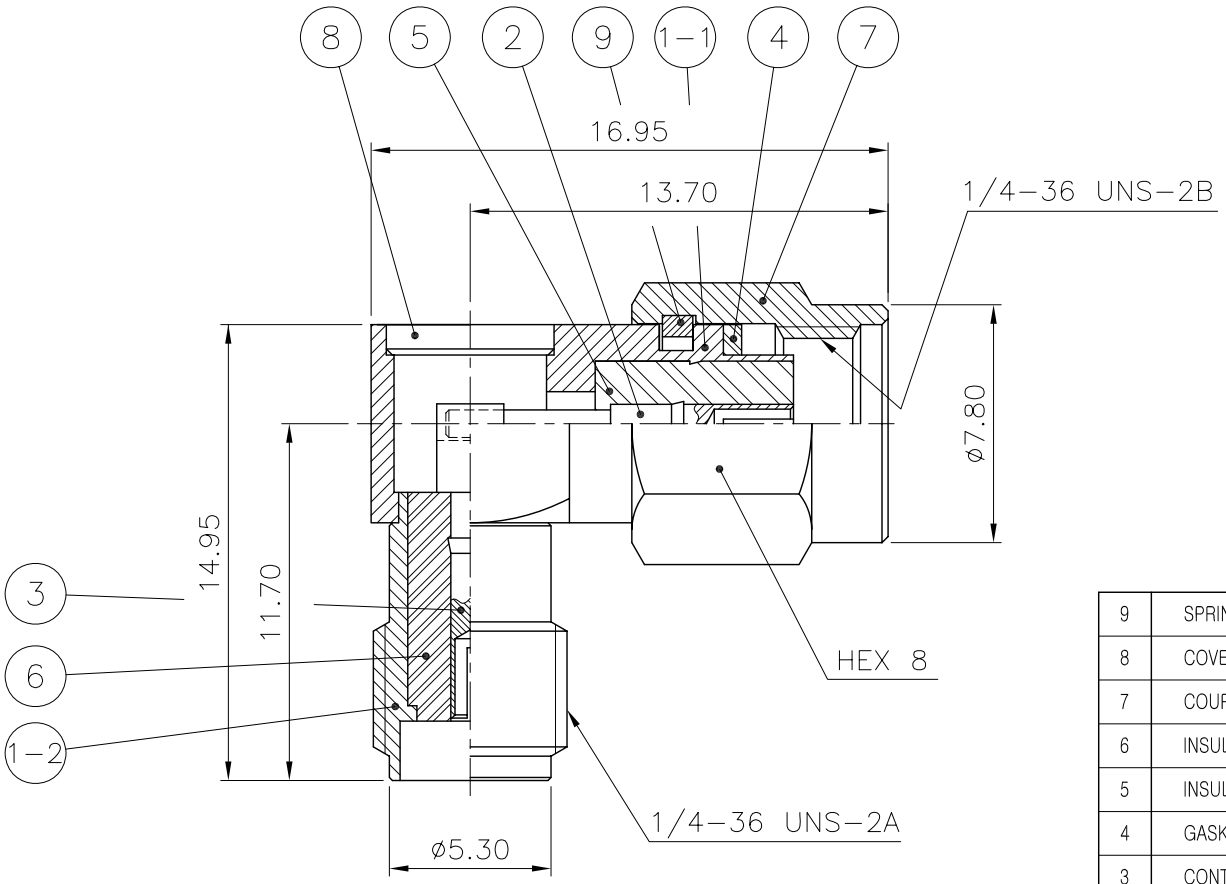

NO.		DESCRIPTION	Q'TY	MATERIAL	PLATING	CODE	
9		SPRING RING	1	SUS304	Passivate	DSR00002-5/1 (R2001)	
8		COVER	1	MBsBD	Gold Plate	DCO00039-5/1 (LB004)	
7		COUPLING CAP	1	MBsBD	Gold Plate	DCU00005-5/1 (K2001)	
6		INSULATOR	1	TEFLON		DIN01255-N/1	
5		INSULATOR	1	TEFLON		DIN01453-N/1	
4		GASKET	1	SILICONE RUB		DGK00004-N/1 (G2001)	
3		CONTACT	1	BeCu	Gold Plate	DCT01819-5/1	
2		CONTACT	1	MBsBD	Gold Plate	DCT03125-5/1	
1	1-2	BODY (B)	1	MBsBD	Gold Plate	DBB00193-5/1	DBD02280-1/1
	1-1	BODY (A)	1	MBsBD	Gold Plate		DBD02279-3/1

TOLERANCE	Decimal ±0.1	DATE	2014. 05. 07.
	Angle ±1°	APPROVED BY	I.C.KIM
MATERIAL	____	CHECKED BY	-
		DRAWN BY	M.H.SONG
FINISH	____	SCALE 4/1	UNIT mm

KJ COMTECH
KJ COMTECH CO.,LTD.
RF & MICROWAVE TECHNOLOGY
Tel : 82-32-347-8015
Fax : 82-32-347-8017

TITLE
SMA50 (J) SMA50 (P) REVERSE RA

A4 | DWG NO. AD00518-7/1 | REVISION I R | SHEET 1 of 1