## REVISION

| REV | DESCRIPTION | DRAWN | APPR | DATE |
|---|---|---|---|---|
| IR | Initial Registration | M.H.SONG | I.C.KIM | 2014.03.13. |
| 1 | [설변처리 No.201504-0003] BODY, JACK 표준화 치수 적용 | H.J.LEE | I.C.KIM | 2015.04.22. |
| 2 | [설변처리 No.201907-0002] 절연체 치수불량으로 인한 코드변경 | S.Y.EUN | I.C.KIM | 2019.07.02. |

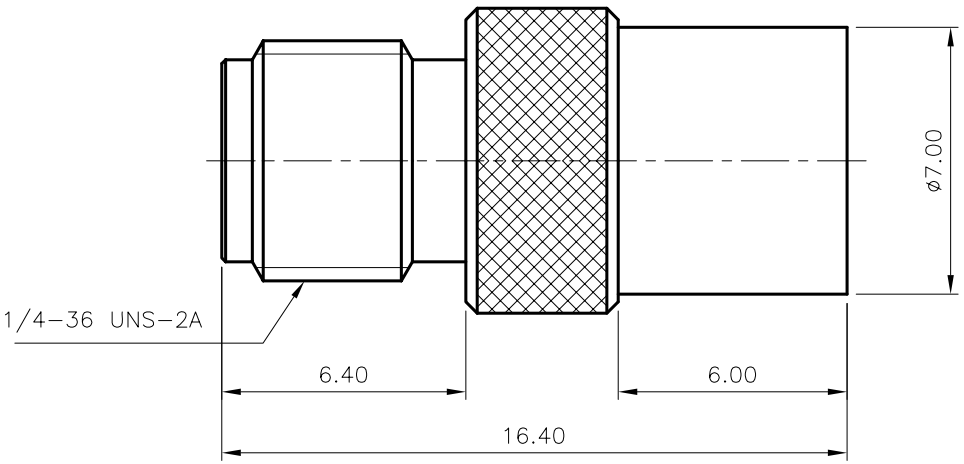


| | NO. | DESCRIPTION | Q'TY | MATERIAL | PLATING | CODE |
|---|---|---|---|---|---|---|
| 1 | 4 | JACK | 1 | MBsBD | Nickel Plate | DJA00159-5/5 ~~DJA00159-5/2~~ |
| 2 | 3 | INSULATOR | 1 | TEFLON | | DAI00144-N/2 ~~DAI00144-N/1~~ |
| | 2 | CONTACT | 1 | BeCu | Gold Plate | DAC00261-5/1 |
| 1 | 1 | BODY | 1 | MBsBD | Nickel Plate | DAD00275-5/1 |

| | | | |
|---|---|---|---|
| TOLERANCE | Decimal ±0.1 | DATE | 2019. 07. 02. |
| | Angle ±1° | APPROVED BY | I.C.KIM |
| | | CHECKED BY | |
| MATERIAL | | DRAWN BY | S.Y.EUN |
| FINISH | | SCALE 4/1 | UNIT mm |


KJ COMTECH
KJ COMTECH CO.,LTD.
RF & MICROWAVE TECHNOLOGY
Tel : 82-32-347-8015
Fax : 82-32-347-8017


TITLE
SMA50 (J) SMBL50 (J) AD

A4

DWG NO. AD00515-7/1

REVISION 2

SHEET 1 of 1