WORK / ST										
ST(Old)										
ST(Rev)										

REVISION

REV	DESCRIPTION	DATE

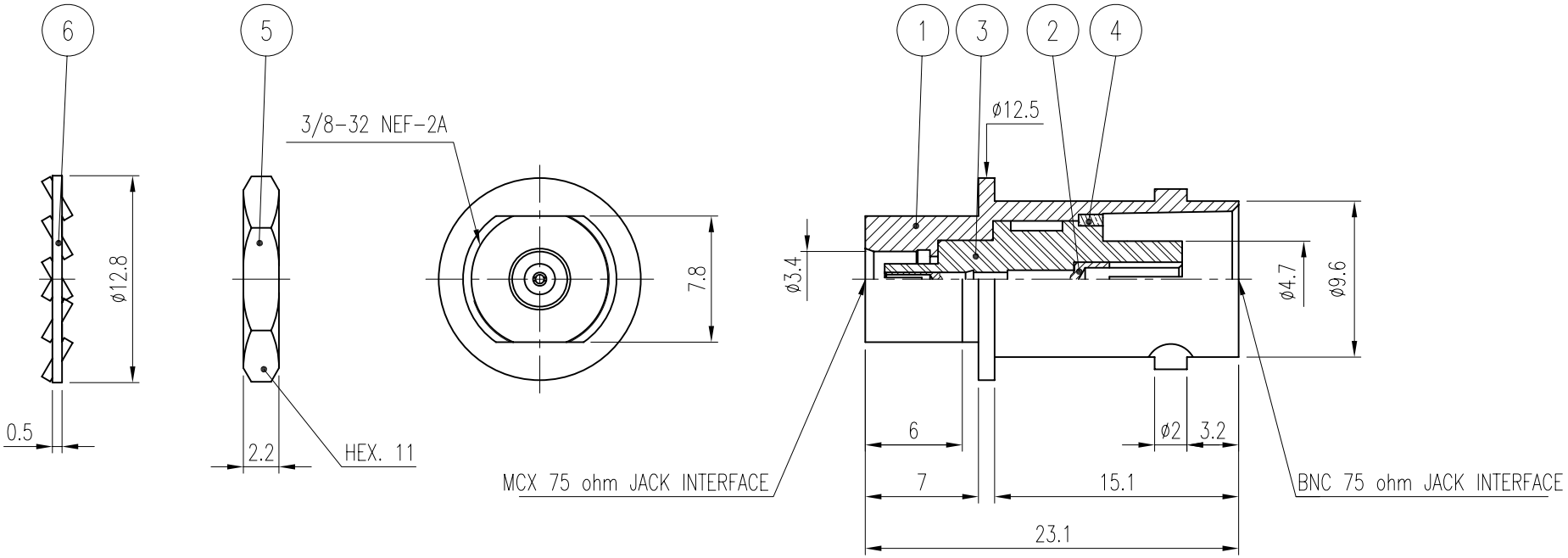

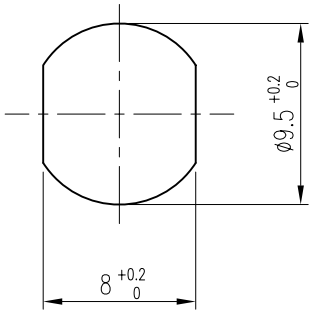

RECOMMENDED MOUNTING HOLE

NO.	DESCRIPTION	Q'TY	MATERIAL	PLATING	REMARKS
6	WASHER	1	BsS	Nickel Plated	DWA00024-5/1
5	NUT	1	BRASS	Nickel Plated	DNT00029-5/1
4	RING	1	BRASS	Nickel Plated	DSR00052-5/1
3	INSULATOR	1	PTFE		DAI00143-N/1
2	CONTACT	1	Beryllium copper	Gold Plated	DAC00260-5/1
1	BODY	1	BRASS	Nickel Plated	DAD00260-5/1

Notes

1. RoHS & Pb-FREE

CUSTOMER	DATE 2006. 12. 27.	KJ COMTECH CO.,LTD.	RF & MICROWAVE TECHNOLOGY Tel : 82-32-347-8015 Fax : 82-32-347-8017
	APPROVED BY		
CUSTOMER CODE	CHECKED BY	TITLE	MCXJ-BNCJ 75Ω ADAPTOR
	DRAWN BY		
	SCALE 2.5/1 / UNIT mm / WEIGHT —	A4	DWG NO. AD00497-7/1
			SHEET K361-076-000