REVISION				
REV	DESCRIPTION	DRAWN	APPR	DATE
IR	Initial Registration	I.C.KIM	I.C.KIM	2013.04.02.

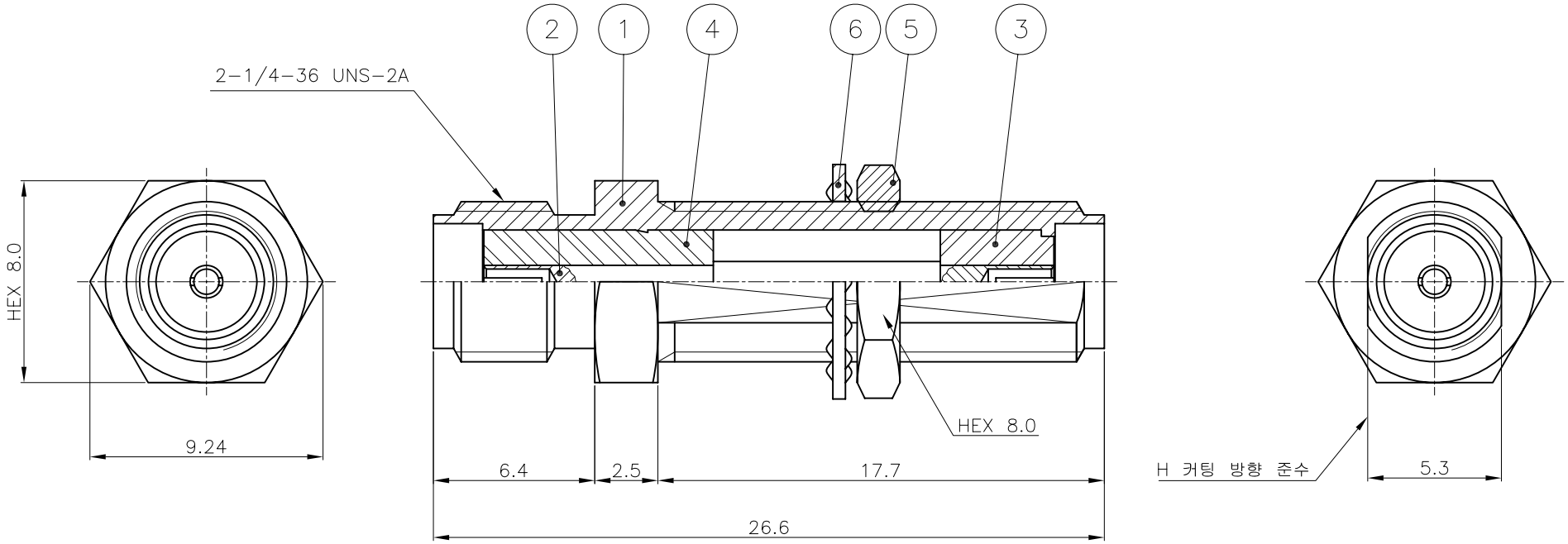

NO.	DESCRIPTION	Q'TY	MATERIAL	PLATING	CODE
6	WASHER	1	BsS	Gold Plate	DWA00005-5/1
5	NUT	1	MBsBD	Gold Plate	DNT00025-5/1
4	INSULATOR	1	TEFLON		DIN00162-N/1
3	INSULATOR	1	TEFLON		DIN00216-N/1
2	CONTACT	1	BeCu	Gold Plate	DCT00082-5/1
1	BODY	1	MBsBD	Gold Plate	DAD00246-5/1

TOLERANCE	Decimal ±0.1	DATE	2013. 04. 02.
	Angle ±1°	APPROVED BY	I.C.KIM
MATERIAL		CHECKED BY	E.H.KIM
		DRAWN BY	I.C.KIM
FINISH		SCALE 4/1	UNIT mm

KJ COMTECH
KJ COMTECH CO.,LTD.
RF & MICROWAVE TECHNOLOGY
Tel : 82-32-347-8015
Fax : 82-32-347-8017

TITLE: SMA50 (J) SMA50 (J) BH ADAPTOR

A4

DWG NO. AD00480-7/1

REVISION I R

SHEET 1 of 1