| REVISION | | |
|---|---|---|
| REV | DESCRIPTION | DATE |
| IR | 최초 개정 | 2009.01.02. |
| 1 | [설변No.201805-0016] 조립성 개선으로 인한 바디 낚시바늘 추가 | 2018.05.25. |

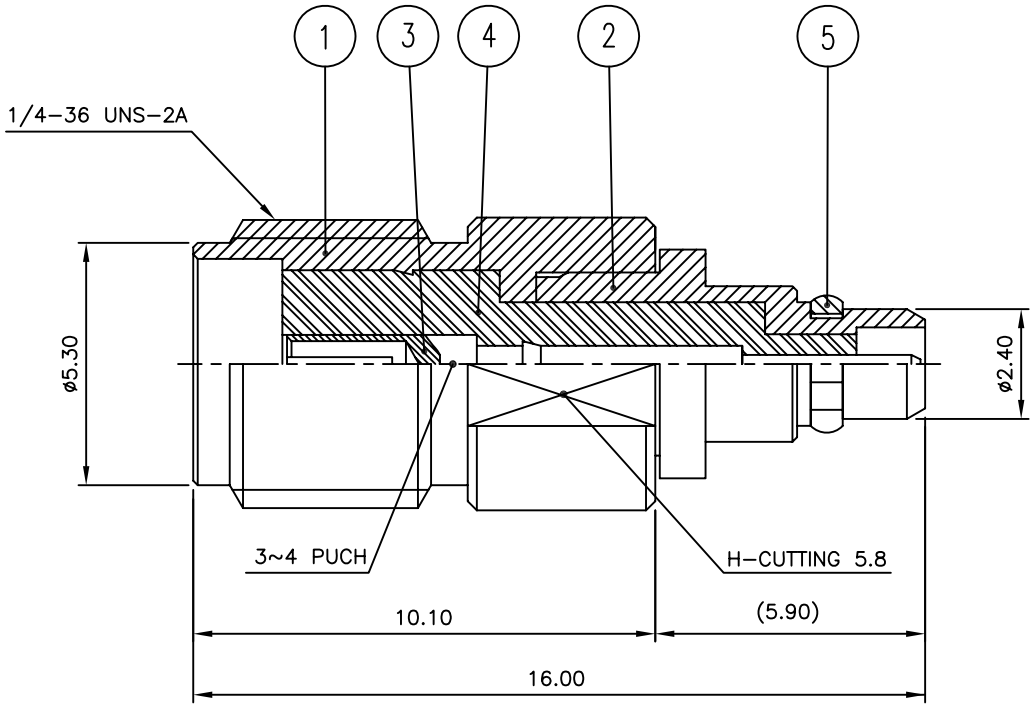


| NO. | DESCRIPTION | Q'TY | MATERIAL | PLATING | CODE |
|---|---|---|---|---|---|
| 5 | SPRING RING | 1 | BeCu C17300 | Gold Plate | DSR00001-5/1 (R1501) |
| 4 | INSULATOR | 1 | TEFLON | | DAI00085-N/1 |
| 3 | CONTACT | 1 | BeCu C17300 | Gold Plate | DAC00151-5/1 |
| 2 | BODY (B) | 1 | MBsBD C3604BD-F | Gold Plate | DAD00146-5/1 |
| 1 (1) | BODY (A) | 1 | MBsBD C3604BD-F | Gold Plate | DBD01408-5/2 |

| | | | |
|---|---|---|---|
| TOLERANCE | Decimal ±0.1 | DATE | 2018. 05. 25. |
| | Angle ±1° | APPROVED BY | I.C.KIM |
| | | CHECKED BY | |
| MATERIAL | ——— | DRAWN BY | S.Y.EUN |
| FINISH | ——— | SCALE 6/1 | UNIT mm |


KJ COMTECH
KJ COMTECH CO.,LTD.
RF & MICROWAVE TECHNOLOGY
Tel : 82-32-347-8015
Fax : 82-32-347-8017


TITLE: MMCX MALE - SMA FEMALE ADAPTOR

A4

DWG NO. AD00373-7/1

REVISION 1

SHEET 1 of 1