REVISION				
REV	DESCRIPTION	DRAWN	APPR	DATE
IR	Initial Registration	E.H.KIM	I.C.KIM	2013. 04. 17.

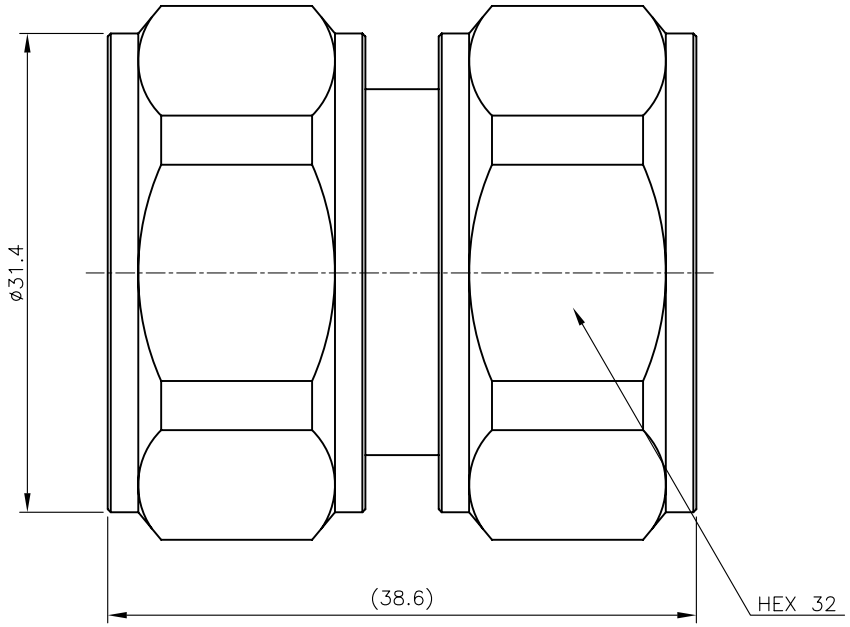

* 전기적 특성

1	Frequency range	DC ~ 5 GHz	
2	IMPEDANCE	50Ω NOMINAL	
3	V.S.W.R	1.1 : 1 max	
4	Insertion Loss	-0.15dB min	
5	PIMD (-43dBm / 2 tone)	CDMA (869~894MHz)	3차: -150dBc max
		WCDMA (2110~2170MHz)	3차: -150dBc max

NO.	DESCRIPTION	Q'TY	MATERIAL	PLATING	CODE
6	GASKET	2	SILICONE RUB.		DGK00054-N/1
5	CAP	2	MBsBD	SUCO Plate	DCU00078-5/1
4	INSULATOR	1	TEFLON	White	DIN01315-N/1
3	CONTACT	1	MBsBD	Silver Plate 3μm	DAC00121-5/2
2	BODY	1	MBsBD	SUCO Plate 3μm	DBD02045-5/1
1	BODY	1	MBsBD	SUCO Plate 3μm	DBD02046-5/1

TOLERANCE	Decimal ±0.1	DATE	2013. 04. 17.
	Angle ±1°	APPROVED BY	I.C.KIM
		CHECKED BY	
MATERIAL	-	DRAWN BY	E.H.KIM
FINISH	-	SCALE 2/1	UNIT mm

KJ COMTECH
KJ COMTECH CO.,LTD.
RF & MICROWAVE TECHNOLOGY
Tel : 82-32-347-8015
Fax : 82-32-347-8017

TITLE
7/16 DIN50 (P) 7/16 DIN50 (P) ST

A4 | DWG NO. AD00341-7/2 | REVISION I R | SHEET 1 of 1