WORK / ST										
ST(Old)										
ST(Rev)										

REVISION

REV	DESCRIPTION	DATE
1	[설변처리No.201801-0016] 생산성 개선 절연체 분할 구조 변경	2018. 01. 31

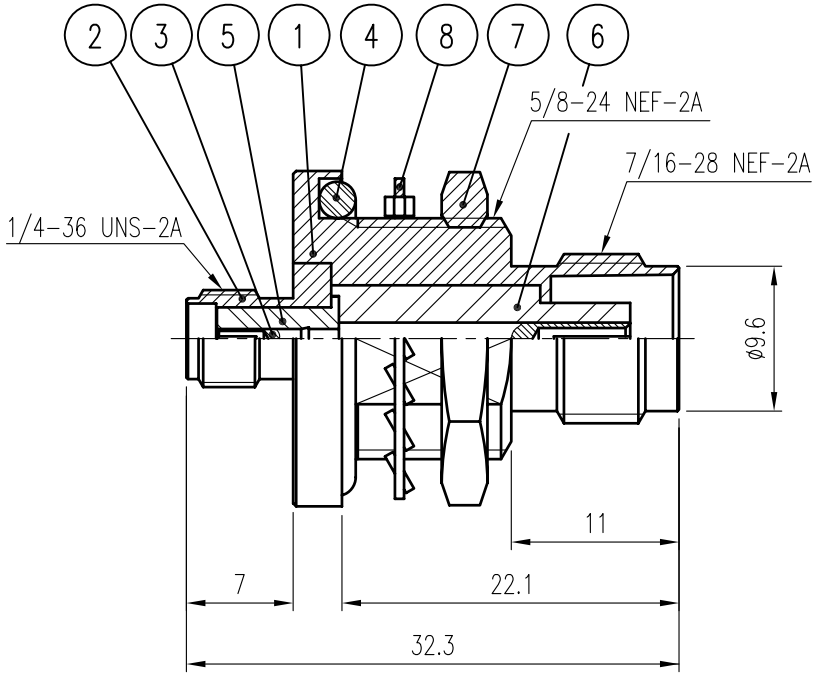

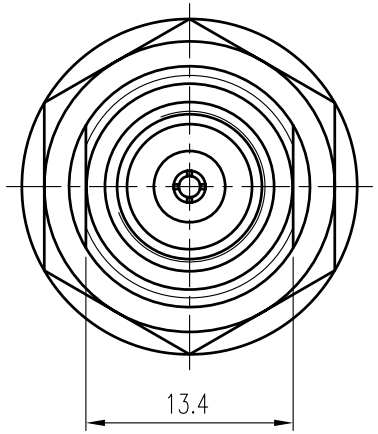

	NO.	DESCRIPTION	Q'TY	MATERIAL	PLATING	REMARKS
	8	WASHER	1	Stainless steel	Passivated	DWA00050-5/1 (Q8025)
	7	NUT	1	BRASS	Nickel Plated	DNT00033-5/1 (N8001)
1	6	INSULATOR	1	PTFE		DAI00067-N/3
1	5	INSULATOR	1	PTFE		DAI00067-N/2
	4	GASKET	1	SILICONE RUB		DGK00046-N/1 (G8013)
	3	CONTACT	1	Beryllium copper	Gold Plated	DAC00105-5/1
	2	BODY (B)	1	BRASS	Nickel Plated	DAD00106-5/1
	1	BODY (A)	1	BRASS	Nickel Plated	DAD00105-5/1

CUSTOMER	DATE 2018. 1. 31.			KJ COMTECH CO.,LTD.	RF & MICROWAVE TECHNOLOGY Tel : 82-32-347-8015 Fax : 82-32-347-8017
	APPROVED BY				
CUSTOMER CODE	CHECKED BY			TITLE SMAJ-TNCBJ	
	DRAWN BY				
TOLERANCES .* ±0.1 .** ±0.05	SCALE 3/1	UNIT mm	WEIGHT —	A4	DWG NO. AD00233-7/1
					OLD CODE.