REVISION				
REV	DESCRIPTION	DRAWN	APPR	DATE
IR	Initial Registration	S.Y.EUN	I.C.KIM	2020.12.15.

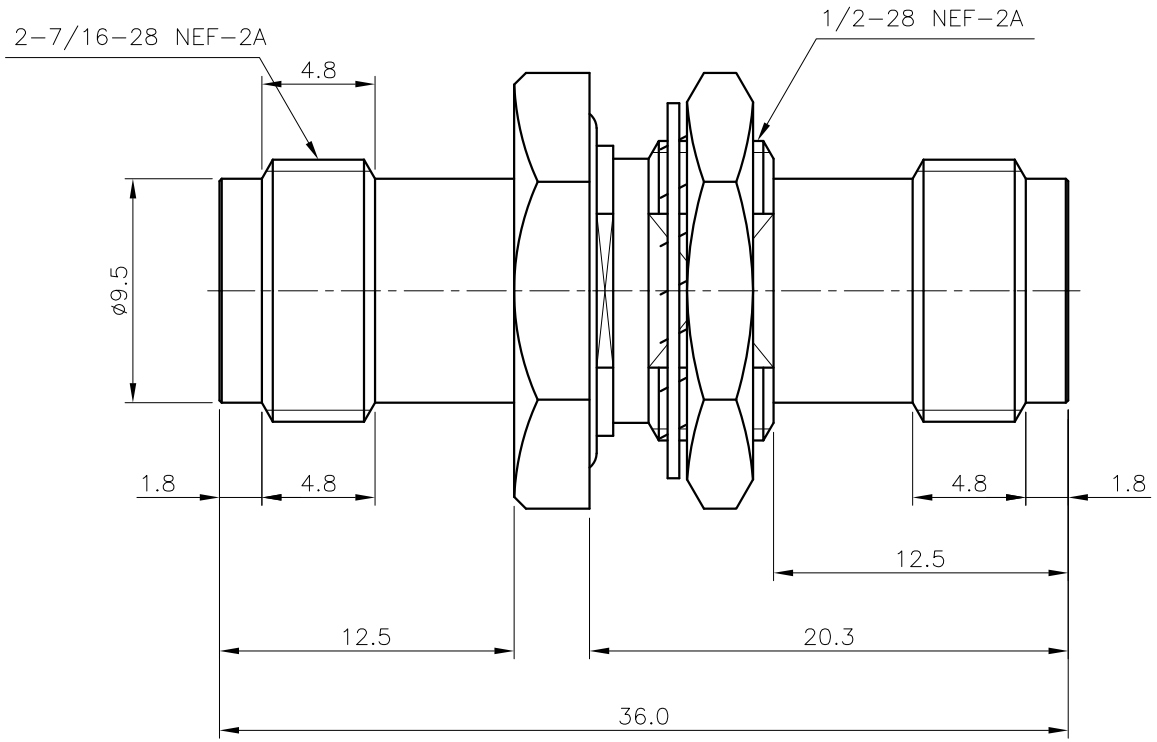

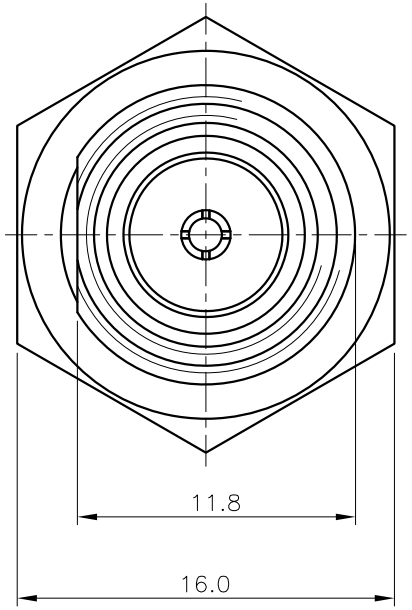

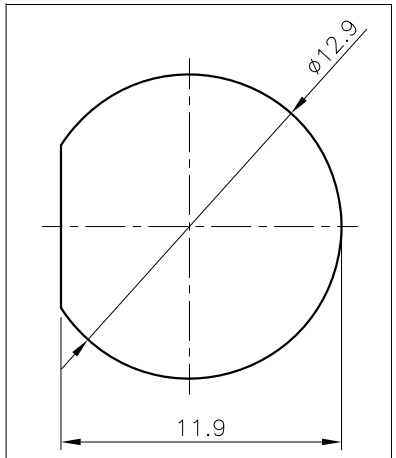

MOUNTING HOLE SIZE

NO.	DESCRIPTION	Q'TY	MATERIAL	PLATING	CODE
7	WASHER	1	MBsBD C3604BD-F	이원합금 (Ni/Tin)	DWA00022-5/4
6	NUT	1	MBsBD C3604BD-F	이원합금 (Ni/Tin)	DNT00020-5/4
5	INSERT	1	MBsBD C3604BD-F	이원합금 (Ni/Tin)	DSR00051-5/7
4	INSULATOR	2	TEFLON		DIN00461-N/1
3	GASKET	1	SILICONE RUB		DGK00186-N/1
2	CONTACT	1	BeCu C17300	Gold Plate	DAC00243-5/1
1	BODY	1	MBsBD C3604BD-F	이원합금 (Ni/Tin)	DAD00242-5/3

TOLERANCE	Decimal ±0.3	DATE	2020. 12. 15.
	Angle ±1°	APPROVED BY	I.C.KIM
		CHECKED BY	
MATERIAL		DRAWN BY	S.Y.EUN
FINISH		SCALE 3/1	UNIT mm

KJ COMTECH
KJ COMTECH CO.,LTD.
RF & MICROWAVE TECHNOLOGY
Tel : 82-32-347-8015
Fax : 82-32-347-8017

TITLE
TNC50 (J) TNC50 (J) BH ADAPTOR

A4 | DWG NO. AD00088-7/4 | REVISION I R | SHEET 1 of 1