REVISION				
REV	DESCRIPTION	DRAWN	APPR	DATE
IR	Initial Registration	S.Y.EUN	I.C.KIM	2021.07.09.

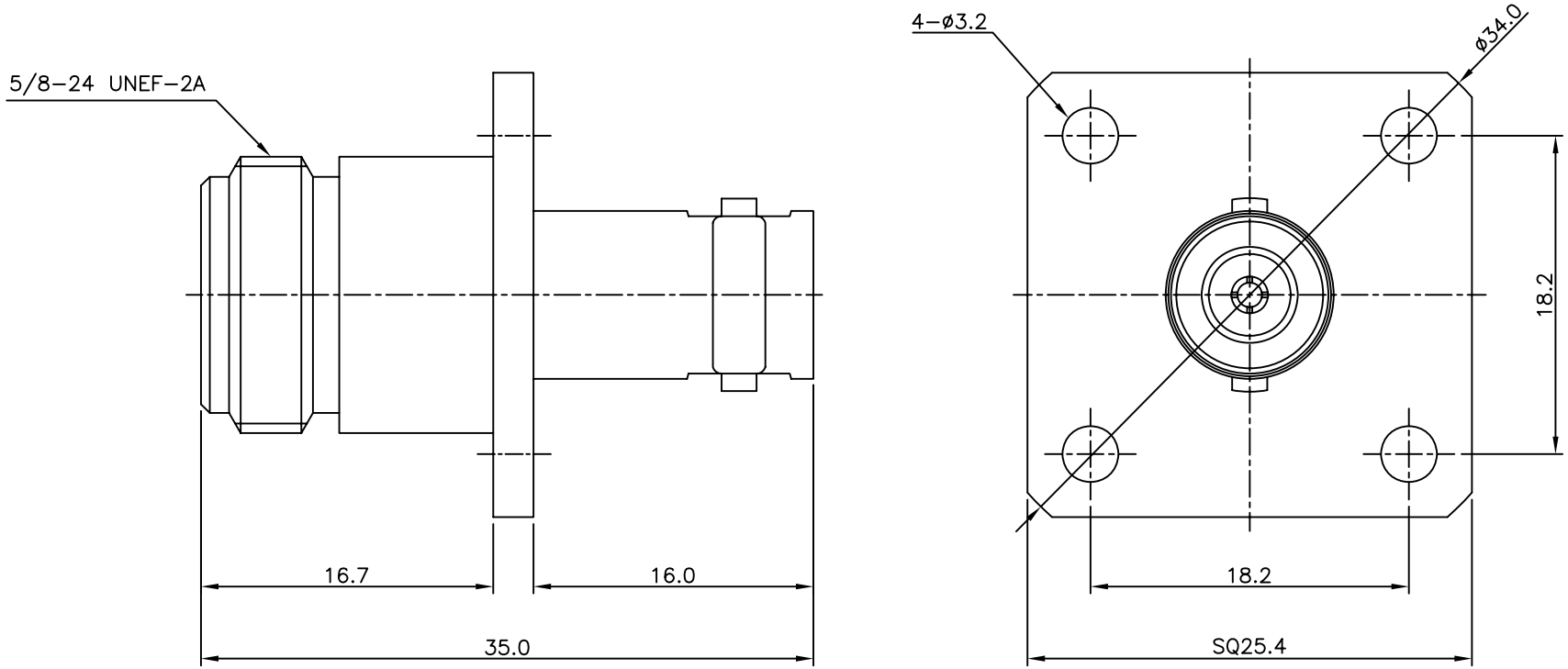

ELECTRICAL DATA

1	IMPEDANCE	50Ω
2	Frequency range	DC ~ 8.0 GHz
3	V.S.W.R	1.2 : 1 max
4	Insertion Loss	-0.2dB min

NO.	DESCRIPTION	Q'TY	MATERIAL	PLATING	CODE
3	INSULATOR	1	TEFLON		DAI00133-N/1
2	CONTACT	1	BeCu C17300	Gold Plated	DAC00242-5/1
1	BODY	1	MBsBD C3604BD-F	Nickel Plated	DAD00051-5/2

TOLERANCE	Decimal ±0.1	DATE	2021. 07. 09.
	Angle ±1°	APPROVED BY	I.C.KIM
		CHECKED BY	
MATERIAL	-	DRAWN BY	S.Y.EUN
FINISH	-	SCALE 2.5/1	UNIT mm

KJ COMTECH
KJ COMTECH CO.,LTD.
RF & MICROWAVE TECHNOLOGY
Tel : 82-32-347-8015
Fax : 82-32-347-8017

TITLE: BNC50 (J) N50 (J) 4HOLE ADAPTOR

A4 | DWG NO. AD00070-7/2 | REVISION I R | SHEET 1 of 1