REVISION		
REV	DESCRIPTION	DATE
IR	최초 개정	2001. 04. 28.
A	신뢰성 향상, 조립성 향상[설변No.연구200908-0002 (내부 구조 변경)	2009. 08. 10.

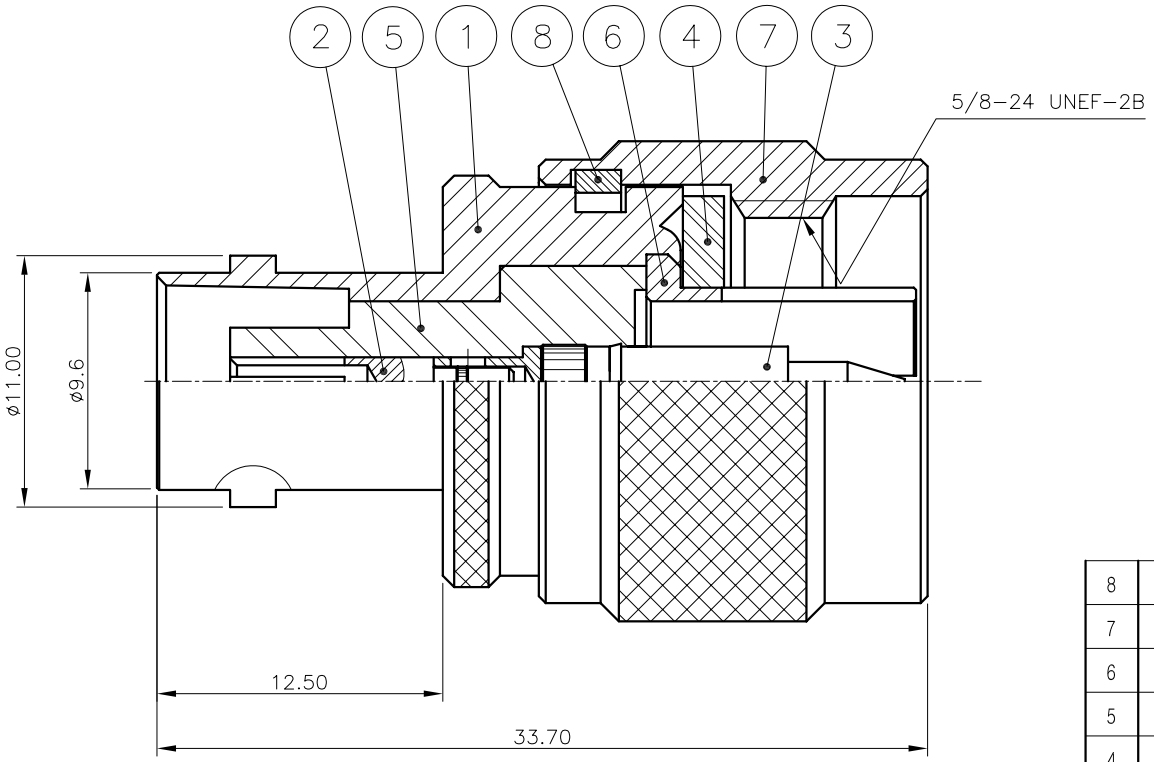

NO.	DESCRIPTION	Q'TY	MATERIAL	PLATING	CODE
8	SPRING RING	1	MBsBD	Nickel Plate	DSR00020-5/1 (R8001)
7	COUPING CAP	1	MBsBD	Nickel Plate	DCU00059-5/1 (K8008)
6	JACK	1	MBsBD	Nickel Plate	DJA00042-5/1 (J8001)
5	INSULATOR	1	TEFLON		DAI00098-N/1
4	GASKET	1	SILICONE		DGK00013-N/1 (G8001)
3	CONTACT	1	MBsBD	Gold Plate	DCT02062-5/1
2	CONTACT	1	BeCu	Gold Plate	DCT02061-5/1
1	BODY	1	MBsBD	Nickel Plate	DAD00166-5/1

TOLERANCE	Decimal ±0.1	DATE	2009. 08. 10.
	Angle ±1°	APPROVED BY	S.J.YOUN
MATERIAL	———	CHECKED BY	I.C.KIM
		DRAWN BY	E.H.KIM
FINISH	———	SCALE 3/1	UNIT mm

KJ COMTECH
KJ COMTECH CO.,LTD.
RF & MICROWAVE TECHNOLOGY
Tel : 82-32-347-8015
Fax : 82-32-347-8017

TITLE: BNC50 (J) N50 (P) ST ADAPTOR

A4

DWG NO. AD00065-7/2 (K361-573-000)

REVISION A

SHEET 1 of 1