REVISION				
REV	DESCRIPTION	DRAWN	APPR	DATE
IR	Initial Registration	S.Y.EUN	I.C.KIM	2020.04.23.

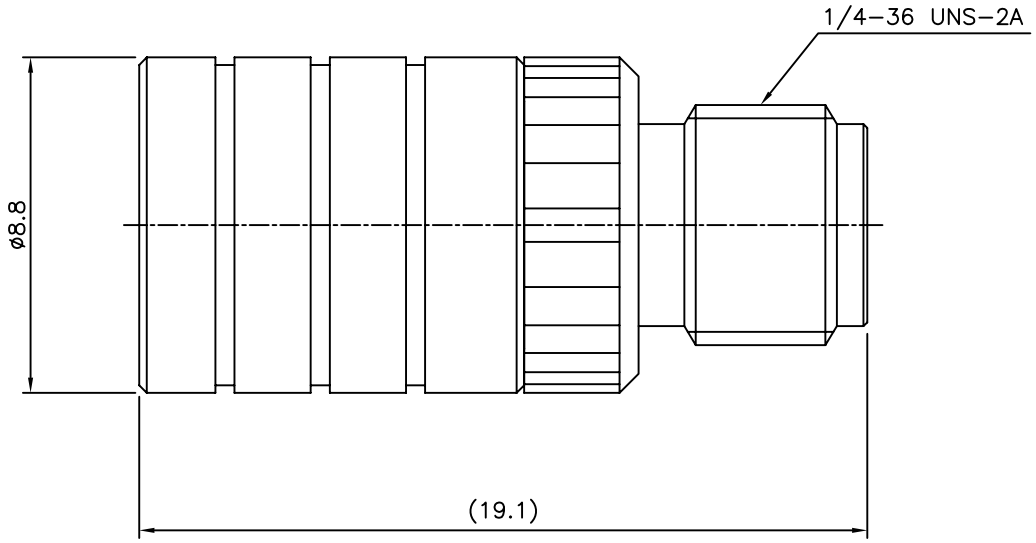

*내전압 검사 할 것

NO.	DESCRIPTION	Q'TY	MATERIAL	PLATING	CODE
5	PLATE SPRING	1	BeCu	Gold Plate	DPS00001-5/1
4	CAP	1	MBsBD C3604BD-F	Nickel Plate	DCU02172-5/3
3	INSULATOR	2	TEFLON		DIN01667-N/1
2	CONTACT	1	BeCu C17300	Gold Plate	DAC03353-5/1
1	BODY	1	MBsBD C3604BD-F	Nickel Plate	DAD00235-5/3

ELECTRICAL DATA :

1. IMPEDANCE : 50ohm
2. FREQUENCY RANGE : DC~18GHz
3. VSWR (Max) : 1.2
4. INSERTION LOSS (Max) : 0.5dB

TOLERANCE	Decimal ±0.3	DATE	2020. 04. 23.
	Angle ±1°	APPROVED BY	I. C. KIM
		CHECKED BY	
MATERIAL	-	DRAWN BY	S. Y. EUN
FINISH	-	SCALE 5/1	UNIT mm

KJ COMTECH
KJ COMTECH CO.,LTD.
RF & MICROWAVE TECHNOLOGY
Tel : 82-32-347-8015
Fax : 82-32-347-8017

TITLE
SMA50 (J) SMA (Push) (P) REVERSE ST

A4 | DWG NO. AD00012-7/5 | REVISION I R | SHEET 1 of 1