REVISION

REV	DESCRIPTION	DRAWN	APPR	DATE
R	Initial Registration			2009.05.18.
1	신뢰성향상[설변No.200905-0018] (SMA부 BODY+TEF GAP발생-TEFLON 코드변경)	E.H.KIM	S.J.YOUN	2000.01.04.
2	[설변처리No.201303-0012] 신뢰성 향상 (낚시바늘 추가 및 내부 형상 변경)	E.H.KIM	I.C.KIM	2013.03.14.
3	[설변처리No.201811-0004] 절연체 가공 난해로 인해 분할 구조로 변경	I.C.KIM		2018.11.21.

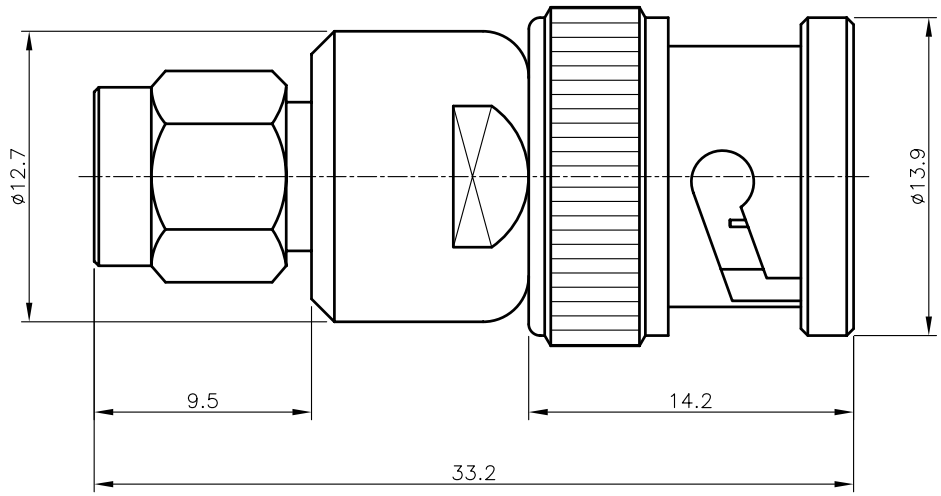

	NO.	DESCRIPTION	Q'TY	MATERIAL	PLATING	CODE
	12	SPRING RING	2	BeCu	Nickel Plate	DWA00069-5/1 (R6001)
	11	SPRING RING	1	SUS	부동태 처리	DSR00002-5/1 (R2001)
	10	WASHER	2	BsS	Nickel Plate	DWA00016-5/1 (Q6002)
	9	WASHER	1	BsS	Nickel Plate	DWA00015-5/1 (Q6001)
	8	BNC CAP	1	MBsBD	Nickel Plate	DCU00044-5/1 (K6001)
	7	COUPLING CAP	1	MBsBD	Gold Plate	DCU00005-5/1 (K2001)
3	6	INSULATOR	1	TEFLON	White	DIN01895-N/1
3 2 1	5	INSULATOR	1	TEFLON	White	DAI00020-N/2 ~~DAI00020-N/1 (EA008)~~
	4	GASKET	1	SILICONE	Red	DGK00012-N/1 (G6001)
	3	GASKET	1	SILICONE	Red	DGK00004-N/1 (G2001)
2	2	CONTACT	1	MBsBD	Gold Plate	DAC00032-5/2 ~~DAC00032-5/1 (EA008)~~
2	1	BODY	1	MBsBD	Nickel Plate	DAD00005-5/2 ~~DAD00005-5/1 (DA010)~~

TOLERANCE	Decimal ±0.1	DATE	2018. 11. 21.
	Angle ±1°	APPROVED BY	
		CHECKED BY	
MATERIAL	-	DRAWN BY	I.C.KIM
FINISH	-	SCALE 3/1	UNIT mm

KJ COMTECH
KJ COMTECH CO.,LTD.

RF & MICROWAVE TECHNOLOGY
Tel : 82-32-347-8015
Fax : 82-32-347-8017

TITLE: SMA50 (M) BNC50 (M) ST ADAPTOR

A4

DWG NO. AD00003-7/3

REVISION 3

SHEET 1 of 1